110 VAC 1 PH COLLATOR WITH HMI

BPA SCHEMATIC BUILD CONTENTS	
SHEET #	M
00	DRAWING INDEX AND PROJECT TITLE
01	SYSTEM LAYOUT
02	PANEL LAYOUT
03	3 PHASE POWER DISTRIBUTION
04	BLANK
05	VFD X 2
06	VFD X 1
07 - 13	BLANK
14	24VDC DISTRIBUTION
15	BLANK
16	SAFETY CIRCUIT
17 - 27	BLANK
28	PLC INPUTS
29 - 34	BLANK
35	PLC OUTPUTS
36 - 51	BLANK
52	MODBUS NETWORK
53 - 54	BLANK
55	TORQUE SPECIFICATIONS

PLC PROGRAM NAME	
HMI PROGRAM NAME	

blueprint automation bpa	CUSTOMER NAME: XXXXX	DRAWN BY: SN	DRAWN DATE: 8/2017	CHECKED BY: CE	CHECKED DATE: 8/2017	SCHEMATIC #: COL-NA-P4M-STD00
	MACHINE DESCRIPTION: Collator		LOCATION DESCRIPTION:		SERIAL #:	REV.: A
						PAGE: 00 OF 55

ALL RIGHTS RESERVED, DRAWING REMAINS PROPERTY OF BLUEPRINT AUTOMATION

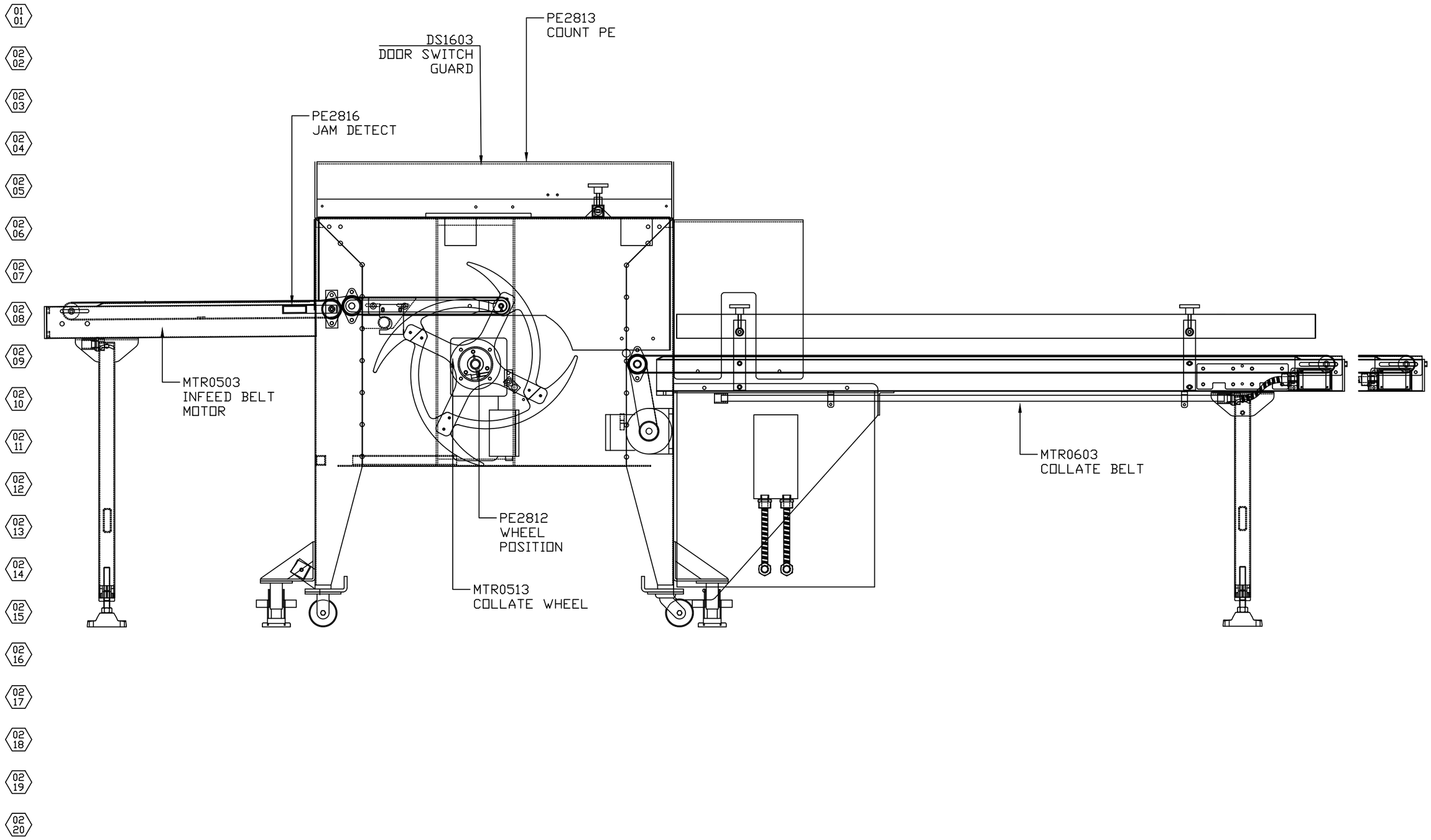

bpa blueprint automation	CUSTOMER NAME	DRAWN BY	DRAWN DATE	CHECKED BY	CHECKED DATE	SCHEMATIC #
	XXXXX	SN	8/2017	CE	8/2017	COL-NA-P4M-STD00
	MACHINE DESCRIPTION	LOCATION DESCRIPTION		SERIAL #	REV.	PAGE
	Collator				A	01 OF 55

ALL RIGHTS RESERVED, DRAWING REMAINS PROPERTY OF BLUEPRINT AUTOMATION

HOFFMAN 24X24

02 01
02 02
02 03
02 04
02 05
02 06
02 07
02 08
02 09
02 10
02 11
02 12
02 13
02 14
02 15
02 16
02 17
02 18
02 19
02 20

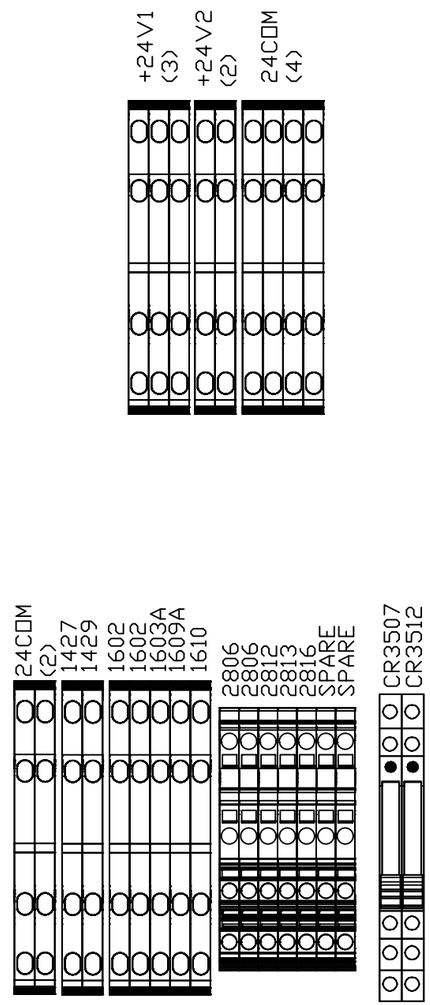

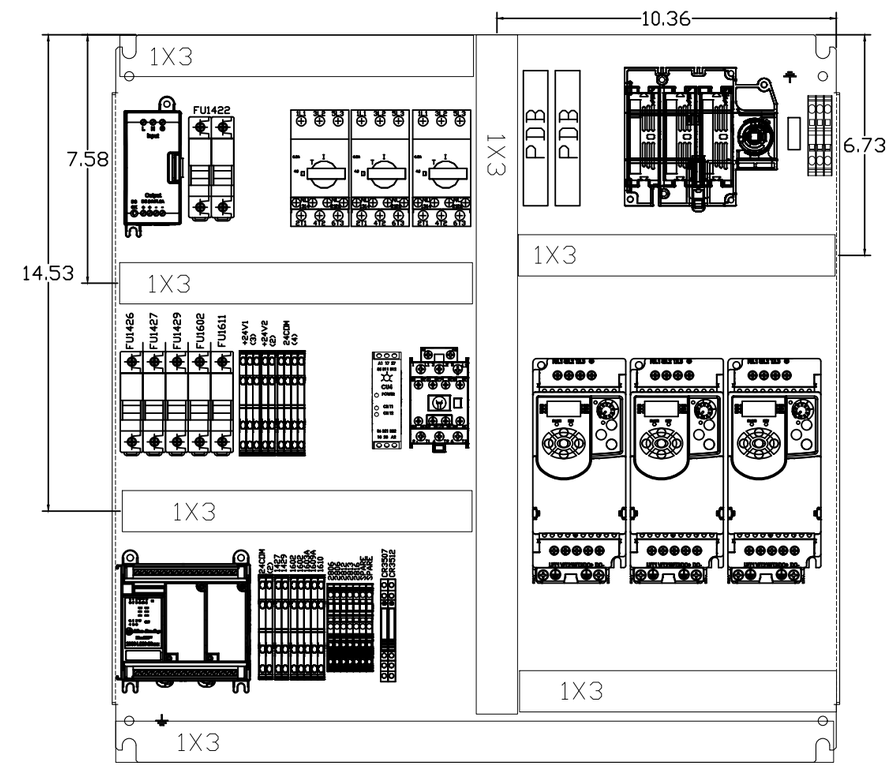

bpa blueprint automation	CUSTOMER NAME: XXXXX	DRAWN BY: SN	DRAWN DATE: 8/2017	CHECKED BY: CE	CHECKED DATE: 8/2017	SCHEMATIC #: COL-NA-P4M-STD00
	MACHINE DESCRIPTION: Collator	LOCATION DESCRIPTION:	SERIAL #:	REV.: A	PAGE: 02 OF 55	

ALL RIGHTS RESERVED, DRAWING REMAINS PROPERTY OF BLUEPRINT AUTOMATION

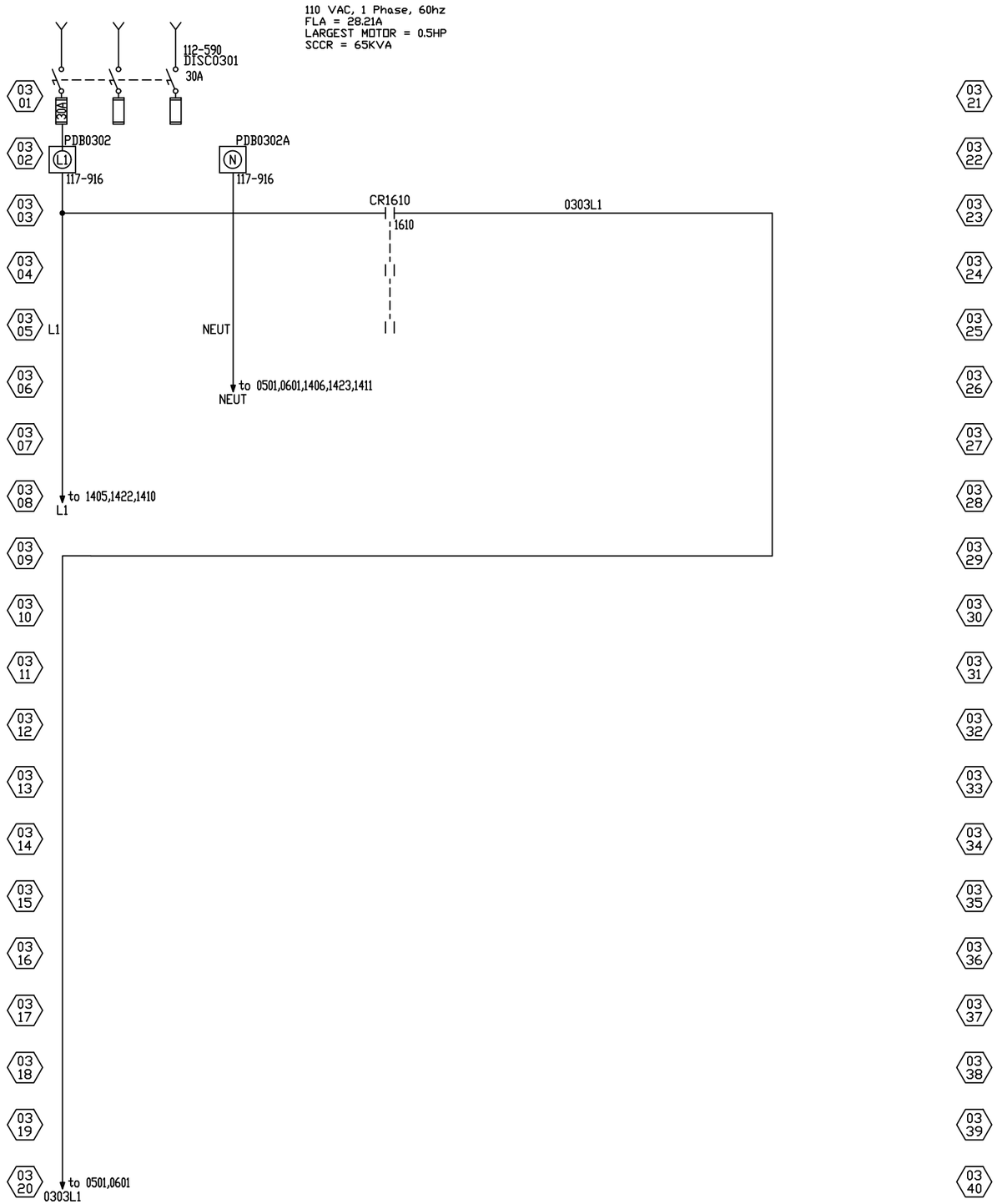

bpa blueprint automation	CUSTOMER NAME	DRAWN BY	DRAWN DATE	CHECKED BY	CHECKED DATE	SCHEMATIC #
	XXXXX	SN	8/2017	CE	8/2017	COL-NA-P4M-STD00
	MACHINE DESCRIPTION		LOCATION DESCRIPTION		SERIAL #	REV. / PAGE
	Collator					A / 03 OF 55

ALL RIGHTS RESERVED, DRAWING REMAINS PROPERTY OF BLUEPRINT AUTOMATION

PAGE 04 INTENTIONALLY LEFT BLANK

ALL RIGHTS RESERVED, DRAWING REMAINS PROPERTY OF BLUEPRINT AUTOMATION

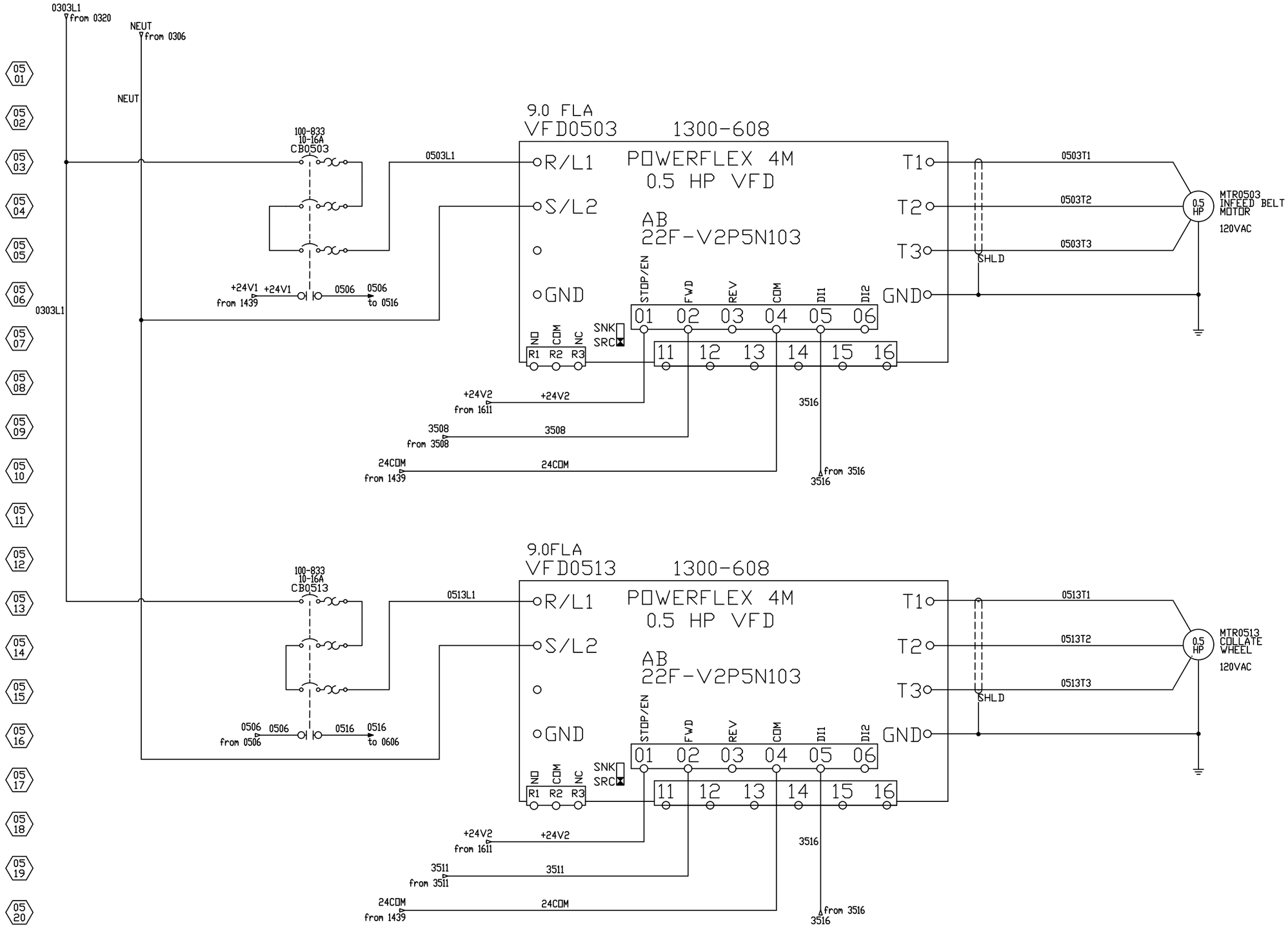

DRIVE PRESETS Powerflex 4M

ALL PARAMETERS ARE DEFAULT EXCEPT THE FOLLOWING

P101	MOTOR VOLTS	230	VOLTS
P103	MOTOR OL	2.2	AMPS
P105	MAX FREQ	90	Hz=
P106	START SOURCE	2	COMM
P107	STOP METHOD	0	
P108	SPEED REF	5	COMM
P109	ACCEL TIME 1	0.5	SEC
P110	DECEL TIME 1	0.5	SEC
T201	CLEAR FAULT	7	
C302	BAUD RATE	4	19.2 K
C303	ADDRESS	3	
C304	COMM LOSS	2	
A401	ACCEL TIME 2	1.0	
A402	DECEL TIME 2	0.1	
A424	DC BRAKE TIME	0.0	
A425	DC BRAKE CURR	0.1	
A451	RETRIES	1	
A459	TEST POINT SEL	8725	

DRIVE PRESETS Powerflex 4M

ALL PARAMETERS ARE DEFAULT EXCEPT THE FOLLOWING

P101	MOTOR VOLTS	230	VOLTS
P103	MOTOR OL	2.2	AMPS
P105	MAX FREQ	60	Hz=
P106	START SOURCE	2	COMM
P107	STOP METHOD	6	
P108	SPEED REF	5	COMM
P109	ACCEL TIME 1	0.1	SEC
P110	DECEL TIME 1	0.1	SEC
T201	CLEAR FAULT	7	
C302	BAUD RATE	4	19.2 K
C303	ADDRESS	2	
C304	COMM LOSS	2	
A401	ACCEL TIME 2	0.1	
A402	DECEL TIME 2	0.1	
A424	DC BRAKE TIME	0.5	
A425	DC BRAKE CURR	3.8	
A451	RETRIES	1	
A459	TEST POINT SEL	8725	

bpa blueprint automation	CUSTOMER NAME: XXXXX	DRAWN BY: SN	DRAWN DATE: 8/2017	CHECKED BY: CE	CHECKED DATE: 8/2017	SCHEMATIC #: COL-NA-P4M-STD00
	MACHINE DESCRIPTION: Collator		LOCATION DESCRIPTION:		SERIAL #:	REV.: A
						PAGE: 05 OF 55

ALL RIGHTS RESERVED, DRAWING REMAINS PROPERTY OF BLUEPRINT AUTOMATION

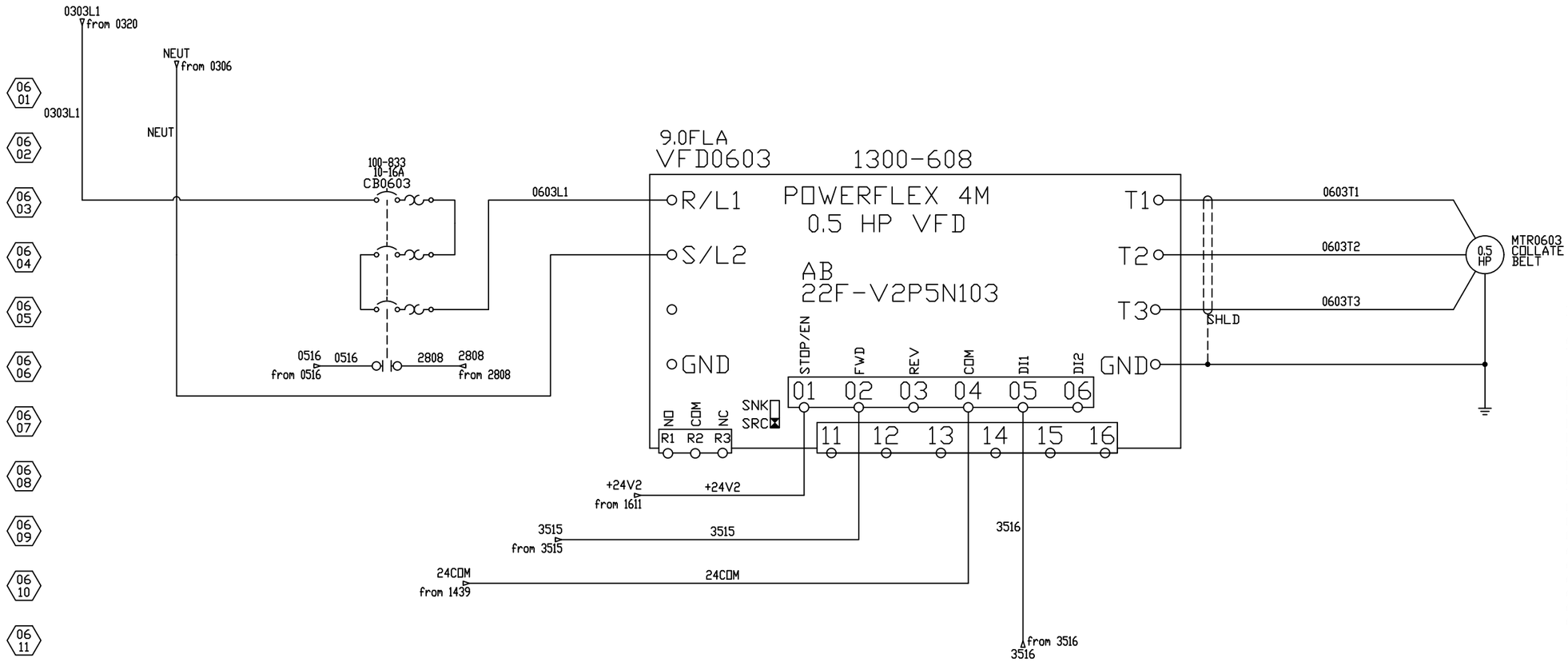

DRIVE PRESETS Powerflex 4M

ALL PARAMETERS ARE DEFAULT EXCEPT THE FOLLOWING

P101	MOTOR VOLTS	230	VOLTS
P103	MOTOR OL	2.2	AMPS
P105	MAX FREQ	90	Hz=
P106	START SOURCE	2	COMM
P107	STOP METHOD	1	
P108	SPEED REF	5	COMM
P109	ACCEL TIME 1	0.1	SEC
P110	DECEL TIME 1	0.1	SEC
T201	CLEAR FAULT	7	
C302	BAUD RATE	4	19.2 K
C303	ADDRESS	1	
C304	COMM LOSS	2	
A401	ACCEL TIME 2	0.1	
A402	DECEL TIME 2	1.0	
A424	DC BRAKE TIME	0	
A425	DC BRAKE CURR	0.1	
A451	RETRIES	1	
A459	TEST POINT SEL	8725	

bpa blueprint automation	CUSTOMER NAME: XXXXX	DRAWN BY: SN	DRAWN DATE: 8/2017	CHECKED BY: CE	CHECKED DATE: 8/2017	SCHEMATIC #: COL-NA-P4M-STD00
	MACHINE DESCRIPTION: Collator		LOCATION DESCRIPTION:		SERIAL #:	REV.: A
						PAGE: 06 OF 55

ALL RIGHTS RESERVED, DRAWING REMAINS PROPERTY OF BLUEPRINT AUTOMATION

07 01
07 02
07 03
07 04
07 05
07 06
07 07
07 08
07 09
07 10 PAGE 07 INTENTIONALLY LEFT BLANK
07 11
07 12
07 13
07 14
07 15
07 16
07 17
07 18
07 19
07 20
07 21
07 22
07 23
07 24
07 25
07 26
07 27
07 28
07 29
07 30
07 31
07 32
07 33
07 34
07 35
07 36
07 37
07 38

bpa blueprint automation	CUSTOMER NAME XXXXX	DRAWN BY SN	DRAWN DATE 8/2017	CHECKED BY CE	CHECKED DATE 8/2017	SCHEMATIC # COL-NA-P4M-STD00
	MACHINE DESCRIPTION Collator		LOCATION DESCRIPTION		SERIAL #	REV. A
						PAGE 07 OF 55

ALL RIGHTS RESERVED, DRAWING REMAINS PROPERTY OF BLUEPRINT AUTOMATION

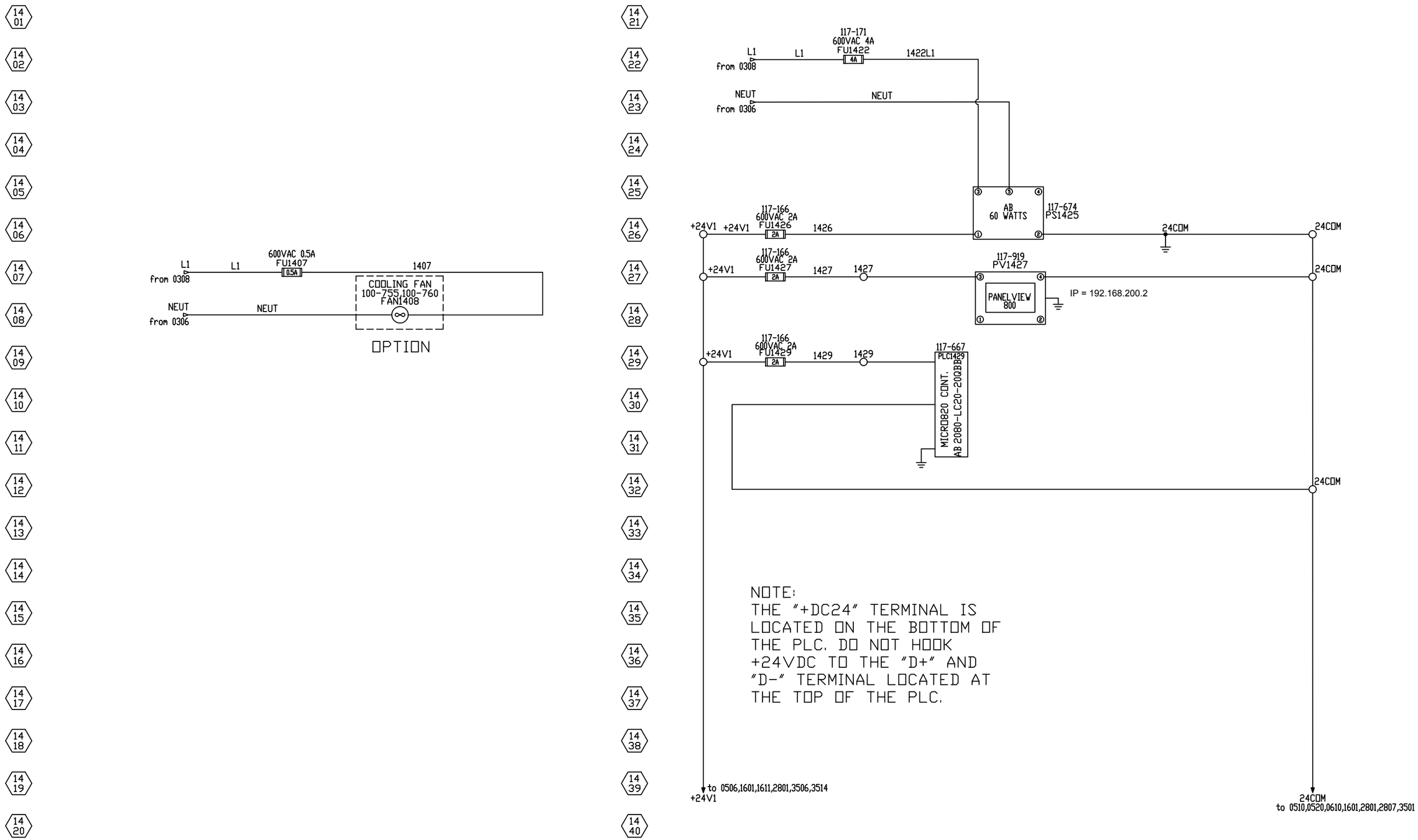

bpa blueprint automation	CUSTOMER NAME	DRAWN BY	DRAWN DATE	CHECKED BY	CHECKED DATE	SCHEMATIC #
	XXXXX	SN	8/2017	CE	8/2017	COL-NA-P4M-STD00
	MACHINE DESCRIPTION		LOCATION DESCRIPTION		SERIAL #	REV. / PAGE
	Collator					A / 14 OF 55

ALL RIGHTS RESERVED, DRAWING REMAINS PROPERTY OF BLUEPRINT AUTOMATION

PAGE 15 INTENTIONALLY LEFT BLANK

ALL RIGHTS RESERVED, DRAWING REMAINS PROPERTY OF BLUEPRINT AUTOMATION

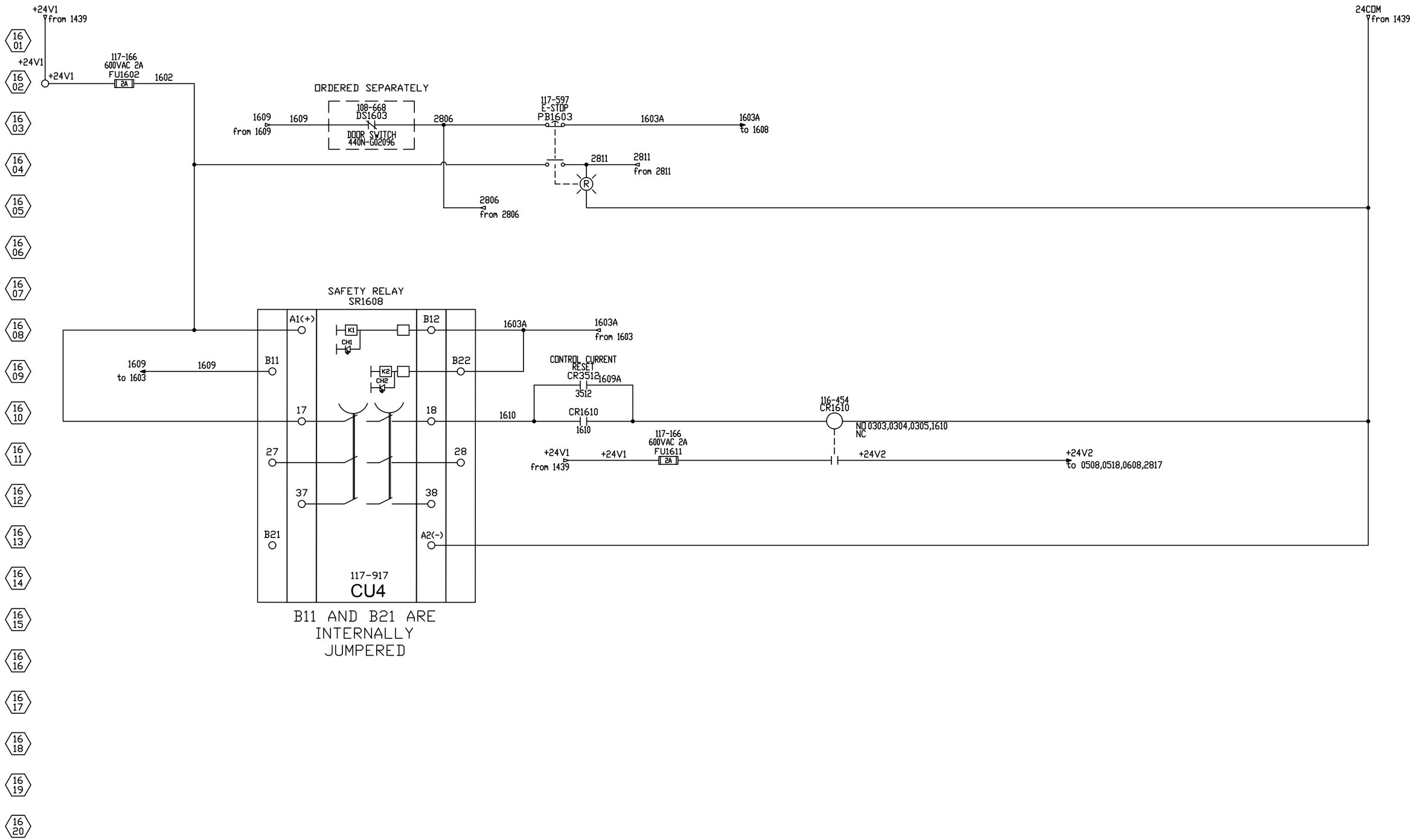

CUSTOMER NAME: XXXXX	DRAWN BY: SN	DRAWN DATE: 8/2017	CHECKED BY: CE	CHECKED DATE: 8/2017	SCHEMATIC #: COL-NA-P4M-STD00
MACHINE DESCRIPTION: Collator		LOCATION DESCRIPTION:		SERIAL #:	REV.: A

ALL RIGHTS RESERVED, DRAWING REMAINS PROPERTY OF BLUEPRINT AUTOMATION

17 01
17 02
17 03
17 04
17 05
17 06
17 07
17 08
17 09
17 10
17 11
17 12
17 13
17 14
17 15
17 16
17 17
17 18
17 19
17 20

PAGES 17 - 27 WERE INTENTIONALLY LEFT BLANK

ALL RIGHTS RESERVED, DRAWING REMAINS PROPERTY OF BLUEPRINT AUTOMATION

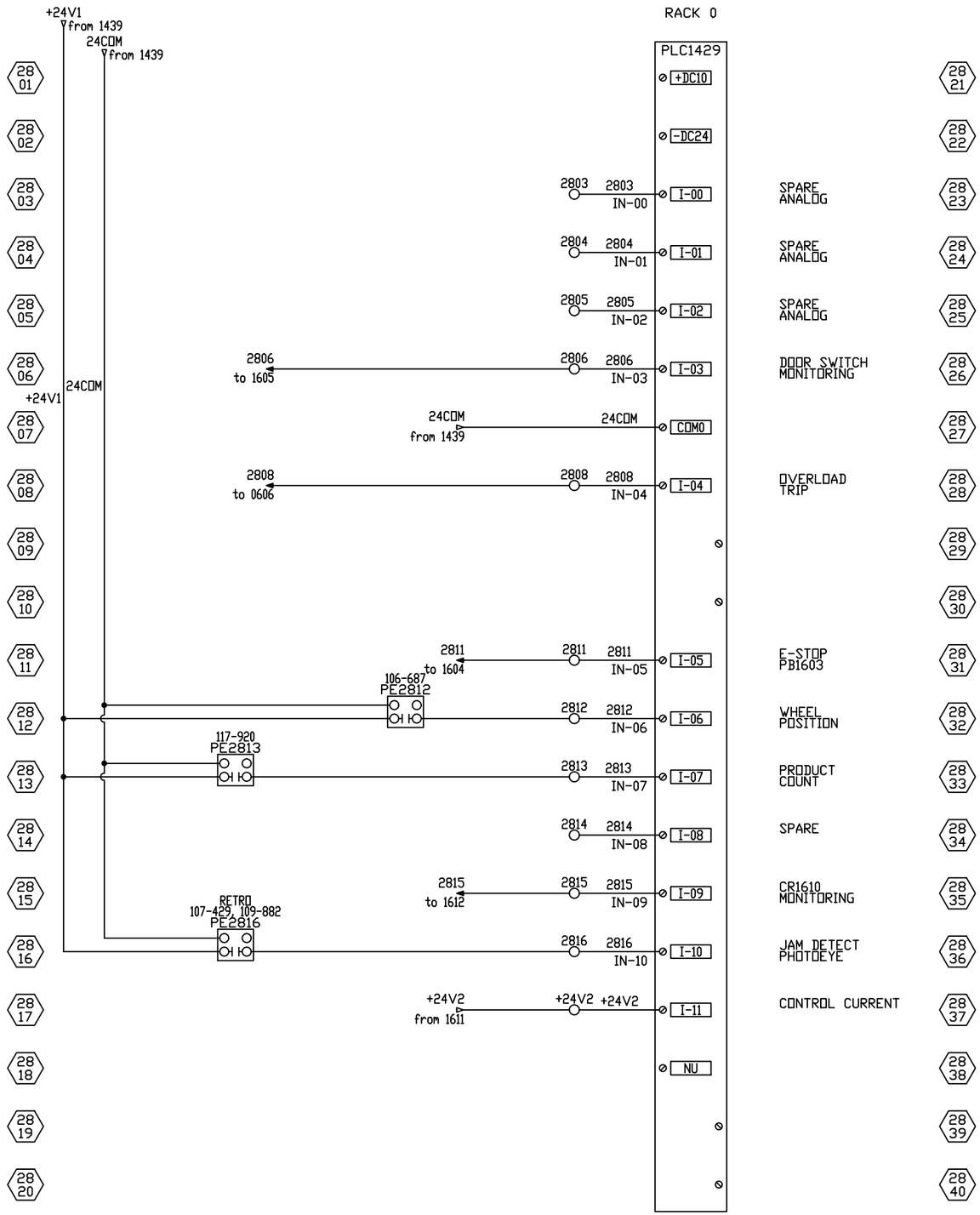

bpa blueprint automation	CUSTOMER NAME XXXXX	DRAWN BY SN	DRAWN DATE 8/2017	CHECKED BY CE	CHECKED DATE 8/2017	SCHEMATIC # COL-NA-P4M-STD00
	MACHINE DESCRIPTION Collator		LOCATION DESCRIPTION		SERIAL #	REV. A
						PAGE 28 OF 55

ALL RIGHTS RESERVED, DRAWING REMAINS PROPERTY OF BLUEPRINT AUTOMATION

29 01
29 02
29 03
29 04
29 05
29 06
29 07
29 08
29 09
29 10
29 11
29 12
29 13
29 14
29 15
29 16
29 17
29 18
29 19
29 20

PAGES 29 - 34 WERE INTENTIONALLY LEFT BLANK

29 21
29 22
29 23
29 24
29 25
29 26
29 27
29 28
29 29
29 30
29 31
29 32
29 33
29 34
29 35
29 36
29 37
29 38
29 39
29 40

bpa blueprint automation	CUSTOMER NAME	DRAWN BY	DRAWN DATE	CHECKED BY	CHECKED DATE	SCHEMATIC #
	XXXXX	SN	8/2017	CE	8/2017	COL-NA-P4M-STD00
	MACHINE DESCRIPTION		LOCATION DESCRIPTION		SERIAL #	REV. / PAGE
	Collator					A / 29 OF 55

ALL RIGHTS RESERVED, DRAWING REMAINS PROPERTY OF BLUEPRINT AUTOMATION

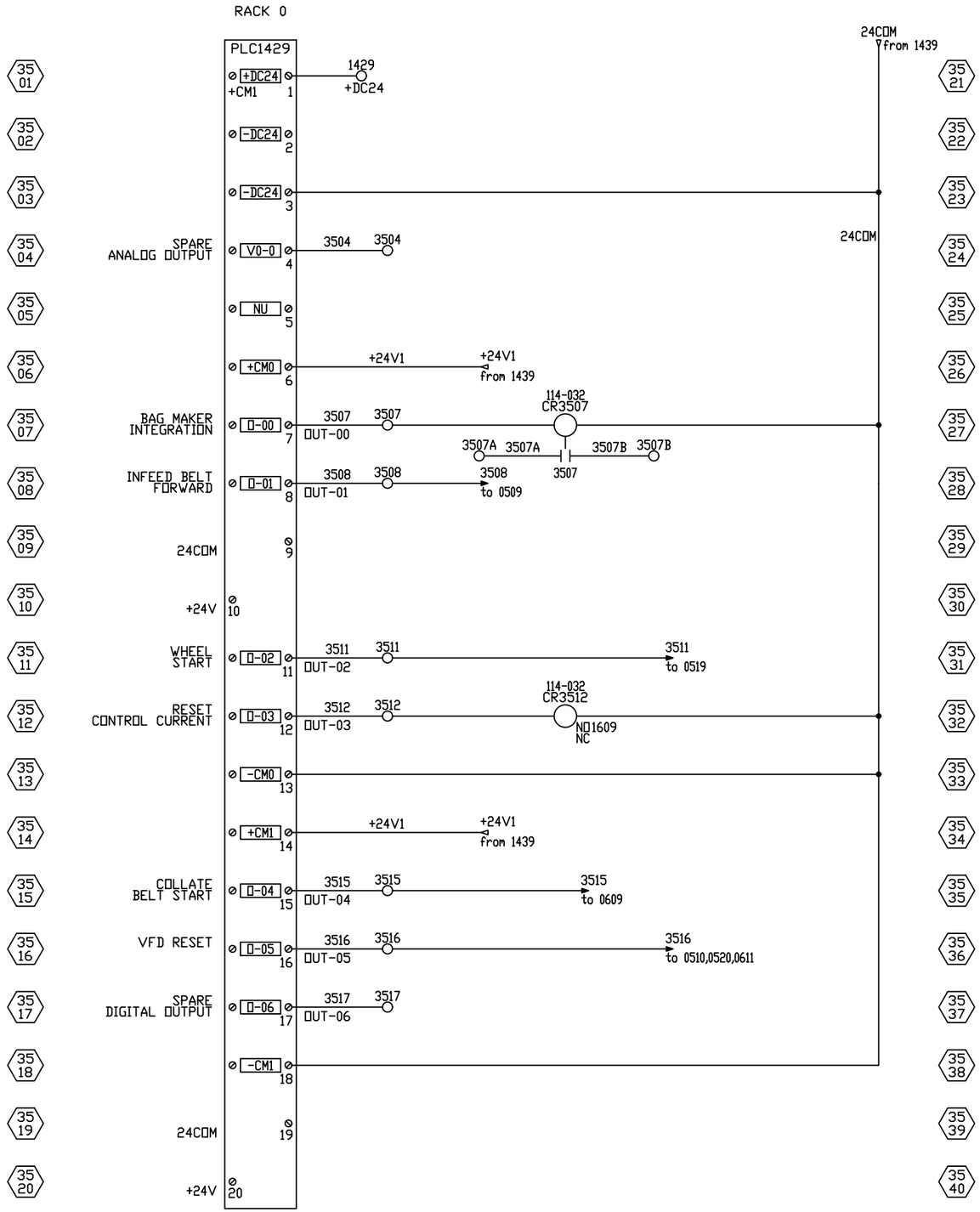

bpa blueprint automation	CUSTOMER NAME: XXXXX	DRAWN BY: SN	DRAWN DATE: 8/2017	CHECKED BY: CE	CHECKED DATE: 8/2017	SCHEMATIC #: COL-NA-P4M-STD00
	MACHINE DESCRIPTION: Collator		LOCATION DESCRIPTION:		SERIAL #:	REV.: A
						PAGE: 35 OF 55

ALL RIGHTS RESERVED, DRAWING REMAINS PROPERTY OF BLUEPRINT AUTOMATION

36 01
36 02
36 03
36 04
36 05
36 06
36 07
36 08
36 09
36 10
36 11
36 12
36 13
36 14
36 15
36 16
36 17
36 18
36 19
36 20

PAGES 36 - 51 INTENTIONALLY LEFT BLANK

36 21
36 22
36 23
36 24
36 25
36 26
36 27
36 28
36 29
36 30
36 31
36 32
36 33
36 34
36 35
36 36
36 37
36 38
36 39
36 40

ALL RIGHTS RESERVED, DRAWING REMAINS PROPERTY OF BLUEPRINT AUTOMATION

Ethernet Network

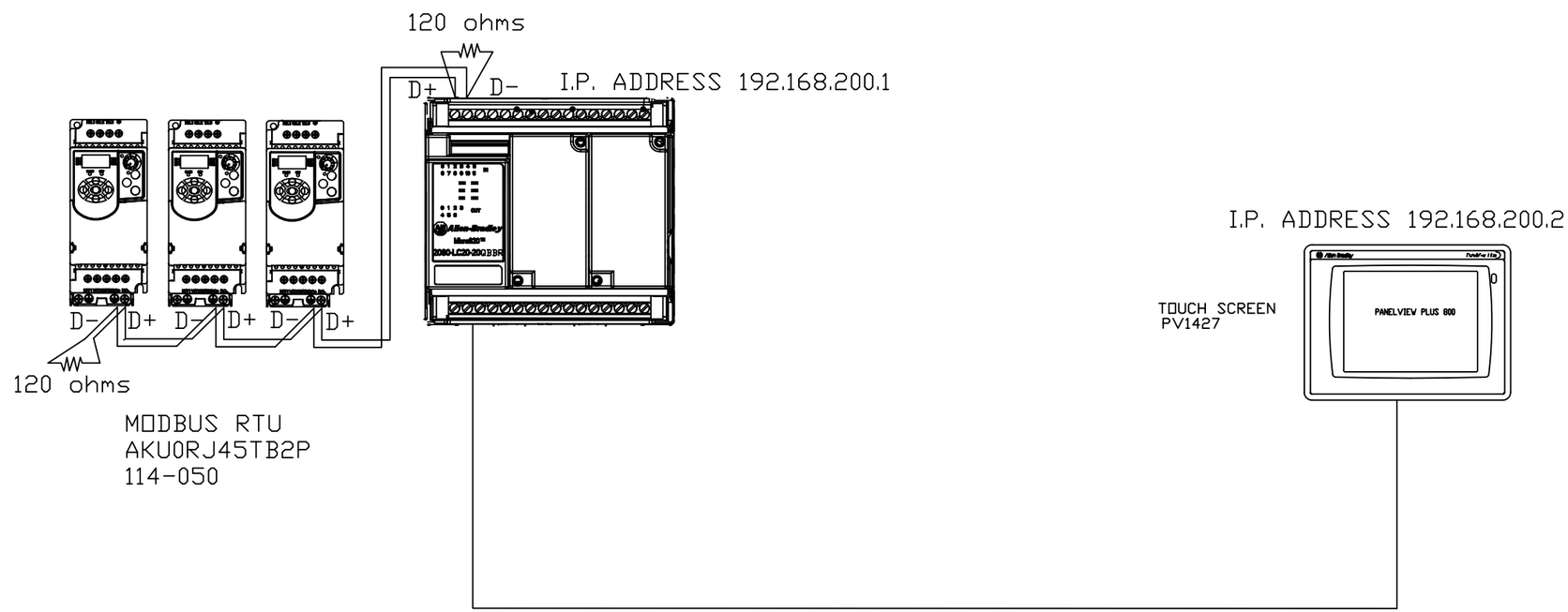

ALL RIGHTS RESERVED, DRAWING REMAINS PROPERTY OF BLUEPRINT AUTOMATION

CUSTOMER NAME	DRAWN BY	DRAWN DATE	CHECKED BY	CHECKED DATE	SCHEMATIC #
XXXXX	SN	8/2017	CE	8/2017	COL-NA-P4M-STD00

MACHINE DESCRIPTION	LOCATION DESCRIPTION	SERIAL #	REV.	PAGE
Collator			A	52 OF 55

53 01
53 02
53 03
53 04
53 05
53 06
53 07
53 08
53 09
53 10 PAGES 53 - 54 INTENTIONALLY LEFT BLANK
53 11
53 12
53 13
53 14
53 15
53 16
53 17
53 18
53 19
53 20
53 21
53 22
53 23
53 24
53 25
53 26
53 27
53 28
53 29
53 30
53 31
53 32
53 33
53 34
53 35
53 36
53 37
53 38

bpa blueprint automation	CUSTOMER NAME XXXXX	DRAWN BY SN	DRAWN DATE 8/2017	CHECKED BY CE	CHECKED DATE 8/2017	SCHEMATIC # COL-NA-P4M-STD00
	MACHINE DESCRIPTION Collator		LOCATION DESCRIPTION		SERIAL #	REV. A

ALL RIGHTS RESERVED, DRAWING REMAINS PROPERTY OF BLUEPRINT AUTOMATION

Electrical Power Component Torque Specifications

Mfg	Mfg Number	Description	Torque (Nm)	Torque (lb-in)
AB	194RF-NC030R# 194RF-NJ030R# 194RF-NN030R# 194R-NA100P3 194R-NA200P3	Disconnect, Rotary, 30A	1.4Nm	12 lb-in
AB	194RF-NJ060R# 194RF-NN060R# 194RF-NA300P3	Disconnect, Rotary, 60A	4.0Nm	35lb-in
AB	100S-C30DJ22C	Contactor, Safety	1.5-3.5Nm	13-31lb-in
AB	1492-PD3C141	Distribution Block, 3 Phase	none provided	
AB	140MCWTE	Terminal, 3Phase Feeder	3.0-3.5Nm	27-31lb-in
AB	140MC2EB63	Motor Starter, 4.0-6.3A	2.0-2.5Nm	18-22lb-in
AB	140MC2EB25	Motor Starter, 1.6-2.5A	2.0-2.5Nm	18-22lb-in
AB	140MC2EB16	Motor Starter, 1.0-1.6A	2.0-2.5Nm	18-22lb-in
AB	140MC2EB10	Motor Starter, 0.63-1.0A	2.0-2.5Nm	18-22lb-in
AB	100C12UZJ10	Contactor, Motor	1.0-2.5Nm	8.9-22lb-in
Mennekes	20MS1A-M2	Disconnect, Rotary, Non-Fused, 25A	none provided	
AB	22AD2P3N104	Drive, Inverter, PowerFlex 4M	1.7-2.2Nm	14-20lb-in
AB	22BD2P3N104	Drive, Inverter, PowerFlex 525	1.7-2.2Nm	14-20lb-in
ACME	T-2A-53340-1S	Transformer, 3 Phase, 480/240	none provided	
AB	2094-BC01-M01-S	Drive, Servo, Kinetix 6000	2.26Nm	20lb-in
Micron	B750BTZ13JK	Transformer, 1 Phase,	none provided	
Weidmuller	991549	Receptacle	none provided	
Hoffman	T-FP41	Cooling Fan	none provided	
AB	1769-PA4	Power Supply, Compact Logix, 4A	1.27Nm	11.24lb-in
AB	1606-XL240E	Power Supply, 240VAC to 24VDC	0.8Nm	7.0lb-in
Mersen	USCC1I	Fuse Holder, 1 Pole, Class CC	1.7Nm	14lb-in
Mersen	USCC2I	Fuse Holder, 2 Pole, Class CC	1.7Nm	14lb-in
Mersen	USCC3I	Fuse Holder, 3 Pole, Class CC	1.7Nm	14lb-in

ALL RIGHTS RESERVED, DRAWING REMAINS PROPERTY OF BLUEPRINT AUTOMATION